Computers & Education 136 (2019) 113–129

Contents lists available at ScienceDirect

Computers & Education

journal homepage: www.elsevier.com/locate/compedu

Online learning usage within Yemeni higher education: The role of compatibility and task-technology fit as mediating variables in the IS success model

Osama Isaac[a,*], Adnan Aldholay[b], Zaini Abdullah[c], T. Ramayah[d]

[a] Faculty of Business and Accountancy, Lincoln University College (LUC), Selangor, Malaysia
[b] Faculty of Business Management and Professional Studies, Management and Science University (MSU), Shah Alam, Malaysia
[c] Faculty of Business Management, Universiti Teknologi MARA, Selangor, Malaysia
[d] School of Management, Universiti Sains Malaysia, Penang, Malaysia

ARTICLE INFO

Keywords:
Online learning
Compatibility
Task-technology fit
Yemen

ABSTRACT

The practice of online learning can appreciably enhance administrative, communicative, and educational qualities, support learning using scarce resources and limited infrastructure, and encourage educational equity through flexible place and time usage. Although researchers have examined online learning usage within multiple situations, the roles of task-technology-fit (TTF) and compatibility as mediating variables have not been investigated through Delone and Mclean's model of IS success. Survey data gathered from 448 students across nine public universities within Yemen was collectively analysed through structural equation modelling (SEM) using SmartPLS 3.0. The findings comprised six primary outcomes, wherein overall quality (service, system, and information qualities) appreciably influences compatibility; compatibility appreciably influences user satisfaction as well as practical use; compatibility mediates associations among overall quality and either satisfaction and practical usage; actual use and the satisfaction of users appreciably influences TTF; the role of TTF presents positive influences performances; and TTF mediates associations among satisfaction and practical usage in one case and performance in another.

1. Introduction

Online learning is increasingly being studied as it represents the technology application in the education field. Throughout the literature it has been termed interchangeably with 'blended learning', 'elearning', and 'distance learning'. Online learning is defined as the use of digital gadgets such as (desktop computers, laptops, tablets, and smartphones) to deliver instructions using the internet (Clark & Mayer, 2016). We noted that the use of online learning is integrated into governmental strategies and programmes that encourage the incorporation of such technologies in education (Tenório, Bittencourt, Isotani, & Silva, 2016).

The advantages of online learning spread to wide aspects, among the first is the convenience and flexibility. Online learning provides schedule flexibility where students can access at any time and are available whenever they want which make it easy to access (Aldholay, Isaac, Abdullah, Abdulsalam, & Al-Shibami, 2018). Moreover, it provides a wide range of different courses and degrees to choose from and make students in control of their study time. Students will have the opportunity to interact with a bigger base of learners and communicate effectively and will have the needed amount of time to absorb the information (Aldholay, Isaac,

* Corresponding author.
E-mail address: osama2isaac@gmail.com (O. Isaac).

https://doi.org/10.1016/j.compedu.2019.02.012
Received 29 November 2017; Received in revised form 17 February 2019; Accepted 19 February 2019
Available online 25 February 2019

Abdullah, & Ramayah, 2018; Aspillera, 2010). Further, online learning will make education possible for people who are far from main cities and cannot afford to go to university in countries like Yemen where young population is big compared to the education infrastructure (Muthanna & Karaman, 2014; Y.; Jung & Lee, 2018).

1.1. Industrial gap (online learning in Yemen)

Yemen consists of 21 provinces, with only 9 public universities in 9 provinces (Sana'a, Aden, Taiz, Hudaidah, Ibb, Dhamar, Hadramouht, Amran, and Al-bayda) whereas 12 provinces do not host a public university. Thus, government of Yemen has the chance to promote online learning system to the provinces that do not have public university so that education is available to all provinces and remote areas (Aldholay, Abdullah, Ramayah, Isaac, & Mutahar, 2018). For this purpose, the Yemeni government founded the Yemen Centre for Information Technology in Higher Education (YCIT-HE), as an authority in the promotion of IT services within the state's public and higher educational institutions. Besides, According Al-Absi, Peneva, and Yordzhev (2017) Yemeni students in public universities highly perceived the important role of information technology in the education domain. However, Aldowah, Ghazal, and Muniandy (2015) and Alrajawy et al. (2018) highlight that the integration between traditional and eLearning in Yemen is faced by significant challenges including technical, social, and cultural aspects.

Yemen ranks last in the indicator of the quality of education system among 138 countries, besides, it is among the world's lowest GDP per capita countries ($1302.90) (The Global Competitiveness Report, 2017). Consequently, Yemen needs initiatives to maximises cost-efficiency and improve education quality. As the online users number is quickly increasing in Yemen (Internet World Stats, 2017), and the subscriptions on mobile gadgets also increasing (World Development Indicators, 2017), online learning has characteristics of needing minimum resources and infrastructure to improve the education quality that make it an ideal solution to the mentioned challenges (Alrajawy, Mohd Daud, Isaac, & Mutahar, 2016; V.; Chang, 2015; and; Shukor, Tasir, & der Meijden, 2015). Yemen remains embroiled in a series of civil and regional wars that have had adverse effects on the infrastructure of its universities. As mobile technology services are more readily restored in the event of disruptions, online learning presents a good solution for students residing in post-crisis regions. This view remains supported in UNESCO (2013) reporting on online learning that sees the practices as lessening disruptions in educational processes throughout conflict regions.

1.2. Theoretical gap

The DeLone and McLean Model of Information Systems Success (DMISM) (Delone & Mclean, 1992), along with its later version (DeLone & Mclean, 2003), remains among the better-known frameworks in the literature on information systems, in terms of technology uses and their outcomes. Prior research has extensively examined advanced Western technologies and their modernising applications (Al-Busaidi, 2013; Islam, 2015; and; Šumak, Hericko, & Pušnik, 2011), although their advantages in use have been neglected (Islam, 2013). This scheme extends its emphasis to include the advantages and outcomes of certain uses of technologies, through an approach that examines the influence of overall or general quality (service, system, and information qualities) on user satisfaction and real usage, which consecutively influences performance. The technique is now broadly utilised to measure success in IS efforts (Montesdioca & Maçada, 2015).

Contrary results were seen in the finding that overall quality appreciably influences users' satisfaction as well as practical usage (Tam & Oliveira, 2016; Jung, Chung, & Leue, 2015; and; Ramirez-Correa, Rondan-Cataluna, Arenas-Gaitan, & Alfaro-Perez, 2017). along with others argued about the irrelevance of such links (Dokhan & Akkoyunlu, 2016; Aparicio, Bacao, & Oliveira, 2017; and; Chiu, Chao, Kao, Pu, & Huang, 2016). The disagreements imply the possibility of further intervening factors that depend on the research contexts and applications. Based on the research of Hofstede and Minkov. (2010) that described Yemen as a land wherein the traits of individualism are less and wherein social influences and resilient relationships are prevalent, it appears that for a novel technology to be embraced, it would need to comply with the values of users as well as the norms of society. This issue is highlighted by Shih, Feng, and Tsai (2008), as some studies are sceptical of the notion that online learning can actually improve student performance, such as Islam (2013), who reported that online learning only has a weak effect on student performance, although this could be due to other factors such as compatibility. A further paper by Islam (2015) investigated compatibility as a mediating factor in eLearning.

Although our study is similar to the following published articles in terms of industrial gap of online learning in Yemen, it is differentiated by its major contribution which is the theoretical one. The theoretical contribution of Alrajawy et al. (2018) was extending the technology acceptance model (TAM) (Davis, 1989) with an individual characteristic (anxiety variable). Moreover, Aldholay, Isaac, Abdullah, Abdulsalam (2018) extended DMISM by focusing on individual characteristic as well (self-efficacy). Further Aldholay, Isaac, Abdullah, and Ramayah (2018) contributed to the DMISM by including the organisational characteristic (transformational leadership). Conversely, this study has shifted the focus to the social and task characteristics (compatibility and task-technology-fit). It is reflected in what Aldowah et al. (2015) mentioned that social and cultural characteristics are among the main issues in the context of online learning adaption. Besides, Aldholay, Isaac, Abdullah, Alrajawy, and Nusari (2018) have touched in the importance of compatibility role in the field of IS, however, it was mainly a systematic literature review which resulted in a proposed conceptual model that has not been empirically tested. On the other hand, this study has empirically examined the role of compatibility and task-technology fit as an extension to DMISM in the context of online learning in Yemen. Additionally, the role of the two variables (compatibility and task-technology-fit) as a mediating variables in DMISM is intended to explain the contradictory results in the literature about the impact of overall quality on each of user satisfaction and actual usage in one side and the impact of user satisfaction and actual usage on performance impact on the other side as mentioned above.

Prior research on DMISM has published mixed results, based on the effects of real usage and users' satisfaction on performance. Stefanovic, Marjanovic, Delić, Culibrk, and Lalic (2016) and Ramirez-Correa et al. (2017) similarly found that a positive relationship exists between actual use and user satisfaction and the effect on performance, although (Cho et al., 2015.; Khayun & Ractham, 2011; Norzaidi, 2008; Wu & Wang, 2006) conversely established such links to be insignificant. Based on Goodhue & Thompson, (1995), actual use is insufficient to render a full description without including consideration of whether such technologies are a match with corresponding tasks, although D'Ambra, Wilson, and Akter (2013) considered TTF as vital in research on the use of modern technologies in institutions. Such contradictory findings show that other aspects may be intervening in the associations, in accordance with the applications and contexts under study. For actual use and user satisfaction to positively affect personal performances, these variables are initially required to process intervening aspects including TTF, a variable that can be defined as the extent to which technologies assist users in the performance of coursework or jobs (Lu & Yang, 2014). Gatara and Cohen (2014) discovered that TTF appreciably influences usage and the effect on performance, while Glowalla and Sunyaev (2014) established similar meaningful relationships.

From a theoretical rationale, and from what is currently known to the researchers, this research is apparently one of the first to apply compatibility in terms of a mediation variable for relationships among overall quality and user satisfaction and real usage. It utilises TTF for mediating relationships among real usage and users' satisfaction in one case and the effect on performance in another, regarding online learning within Yemen.

2. Literature review

2.1. Overall quality

As a result of the emerging difficulties found in sophisticated information systems, researchers and specialists are bent on improving the functionality and quality of newer systems in order to exploit future prospects for growth (Wang & Lai, 2014). Overall qualities have therefore been examined in the role of second order constructs that comprise service, system, and information qualities (Ho, Kuo, & Lin, 2010; Isaac, Abdullah, Ramayah, Mutahar, & Alrajawy, 2017). Furthermore, system quality is described as the intensity with which the users feel that systems are easy to operate, connect, and learn as well as enjoyable in use (Petter & McLean, 2009). Information quality is described as the intensity with which users regard information from online learning as being accurate, thorough, timely, organized, and updated (Halonen, Acton, Golden, & Conboy, 2009). As well, service quality is described with the attributes of reliability, assurance, tangibility, responsiveness, interactivity, empathy, and functionality (DeLone & Mclean, 2003; Lin, Fofanah, & Liang, 2011; Pituch & Lee, 2006). This research suggests that the greater the overall quality of newer technologies, the more likely that these will mirror desires and lifestyles of their users. The influence of overall or generalised quality on beliefs and compatibility was examined by Alzahrani, Al-karaghouli, and Weerakkody (2017) and was determined to present a meaningful relationship. Thus, the following hypothesis is presented:

H1. Overall quality significantly influences compatibility.

2.2. Compatibility (CMP)

In the information systems (IS) field, compatibility is considered as one of the fundemental antecedents to user adoption of new technology or application (Cheng, 2015; Ozturk, Bilgihan, Nusair, & Okumus, 2016) likewise, Premkumar (2003) suggested that it was found to be an important determinant of IS innovation adoption. Compatibility is described as the intensity with which innovations are perceived to align with the current needs, values, and prior experiences of their probable adopters (Rogers, 1995). The literature in the internet and education field has yet to pay significance attention to this variable (Kit, Cheung, & Lai, 2005). In other technology application Wu & Wang, 2006 found that high compatibility leads to preferable adoption of mobile systems. In this research, the disposition is described as the intensity with which online learning technologies fit student beliefs, values, and lifestyles (Ozturk et al., 2016). Islam and Azad (2015) discovered that compatibility has an appreciable influence on satisfaction, whereas Cheng (2015) established a meaningful relationship among usage and compatibility with regards to mobile learning programmes in Taiwan. This research will investigate the mediation effects of compatibility on associations among overall quality and real usage and also among user satisfaction and overall quality, based on the direct and validated effects of overall quality on user satisfaction and real usage (Isaac, Abdullah, Ramayah, & Mutahar, 2017b; Stefanovic et al., 2016) as well as the meaningful influence of compatibility on user satisfaction and real usage (Y. Cheng, 2015; Islam, 2015). Consequently, the following hypotheses are proposed:

H2. Compatibility significantly influences actual usage.

H3. Compatibility significantly influences user satisfaction.

2.3. Actual usage

Based on DeLone and McLean (2016), real usage is described as the extent to which individuals use the functions of information systems, based on the nature, frequency, and period of use of particular technologies. In the field of online learning, real use similarly reflects the frequency, and period of use (Kim et al., 2007). DeLone and McLean (2016) similarly showed that one of the critical

approaches in researching the use of technologies is the assessment of the influence of system use on factors for IS effectiveness including user satisfaction and performance, and a number of researchers have investigated the effect of real use in terms of these factors (Hou, 2012; Son et al., 2012). Regardless of the mixed findings, a meaningful association was established among real use and satisfaction as well as performance (D'Ambra et al., 2013; Isaac et al., 2017b; Makokha & Ochieng, 2014; Ramirez-Correa et al., 2017). Nevertheless, other researchers have argued about the irrelevance of the relationship (Cho et al., 2015; Wu & Wang, 2006). This study examines the effect of actual usage on satisfaction as recommended by Isaac, Abdullah, Ramayah, and Mutahar (2017a, 2017b). This research similarly proposes that the longer the durations and frequencies of usage of advanced technologies among students, the more they are enabled to finish assigned tasks, and the more these technologies enable them to meet academic obligations. Thus, the following hypotheses are proposed:

H4. Actual usage significantly influences user satisfaction.

H5. Actual usage significantly influence task-technology fit.

2.4. User satisfaction

The general satisfaction of users is one of the key success indicators used in the assessment of new systems adoptions and has therefore been widely applied in IS practices (DeLone & McLean, 2016; and; Montesdioca & Maçada, 2015). Xinli (2015) referred to user satisfaction as the degree to which users perceive systems as useful and to desire their reuse, while Lin and Wang (2012) described the disposition as the users' system satisfaction in terms of functions, qualities, formats, and quickness of such systems. The disposition has been similarly described as the intensity with which online learning students find satisfaction in their individual decision to rely on such services and how well they meet expectations (Roca, Chiu, & Martinez, 2006; Wang, 2008; and; Wang & Liao, 2008). Several papers have confirmed user satisfaction as playing a vital role in IS practices, within numerous contexts and technological applications. Isaac et al. (2017) describe as an example the satisfaction of a user as a disposition that meaningfully influences the effect on his performance. Culibrk et al. (2016) discovered that a similar meaningful association exists among user satisfaction and the net advantages. This research suggests that the more satisfaction students have with such technologies in that these meet expectations, the more these will assist them in finishing assigned tasks, and therefore the more these will develop into necessities for fulfilling their educational obligations. Consequently, the following hypothesis is proposed:

H6. User satisfaction significantly influence task-technology fit.

2.5. Task-technology fit

In this research, TTF is described as the intensity with which systems match interests, suit or fit tasks, and meet requirements (Lin & Wang, 2012). Lu and Yang (2014) described the concept as the extent to which technologies assist users in their performance of coursework or jobs. They similarly referred to the disposition as the extent to which a particular system is appropriate or fit for assisting in the completion of tasks, based on work requirements (Lu & Yang, 2014). Regarding the use of technology in organisations, real use remains insufficient for rendering a full description without including TTF in full consideration, that is if the technologies match with their corresponding tasks (Goodhue & Thompson, 1995). Several papers have examined the positive effects of TTF regarding usage behaviours. The well-regarded Glowalla and Sunyaev (2014) and Lee and Lehto (2013) examined the positive effects of TTF on factors regarding IS effectiveness, including the effect on performance and the net advantages. Their findings are supported by much prior research that discovered a positive association among TTF and personal performances (Gatara & Cohen, 2014; D'Ambra et al., 2013; D'Ambra & Wilson, 2011; McGill & Klobas, 2009; Larsen, Sørebø, & Sørebø, 2009; Daud et al., 2011; Norzaidi, Chong, Murali, & Salwani, 2007; and; Lee, Lee, & Kim, 2005). This research will investigate the mediation effects of TTF on the association among real use and performance as well as among user satisfaction and the effect on performance, based on the direct and validated effects of real usage and user satisfaction on performance (Culibrk et al., 2016; and Isaac et al., 2017b) and also the meaningful influence of TTF on performance. Consequently, the following hypotheses are proposed:

H7. Task-technology fit significantly influence performance impact.

H8. Overall quality has an indirect effect on actual usage via compatibility.

H9. Overall quality has an indirect effect on user satisfaction via compatibility.

H10. Actual usage has an indirect effect on performance impact via task-technology fit.

H11. User satisfaction has an indirect effect on performance impact via task-technology fit.

2.6. Performance impact

Researchers have defined both real usage and intention to use as dependent variables in the investigation of factors that influence the embrace of particular technologies (Cheng, Chen, & Yen, 2015; Cheung & Vogel, 2013; Iqbal & Qureshi, 2012). In view of fast changing trends and the emergence of numerous new technologies, the current emphasis is on determining outcomes in terms of

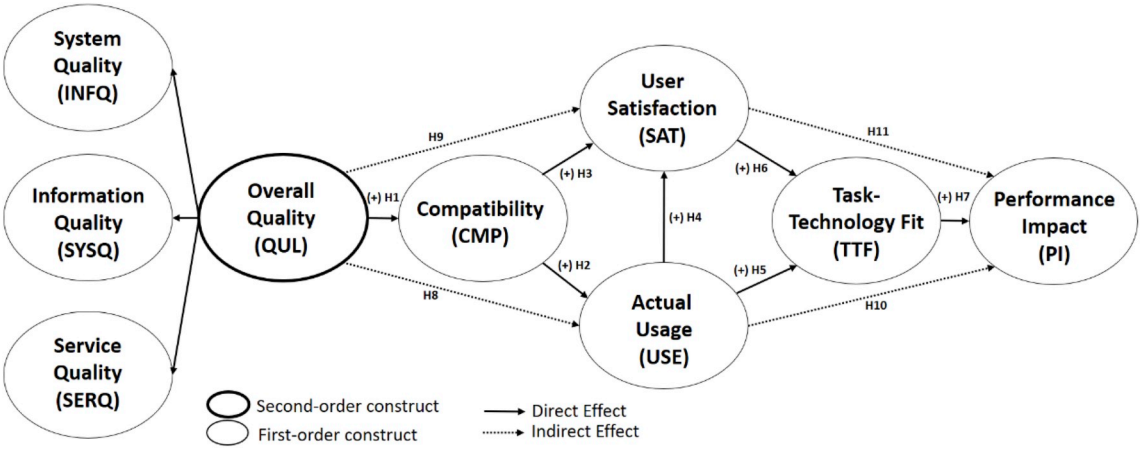

Fig. 1. Conceptual model.

system use, given performance enhancements for evaluating and measuring system successes (Chen, 2013; Isaac et al., 2017b; Isaac et al., 2017; Montesdioca & Maçada, 2015). The effect of performance is described as the degree to which system use increases work quality in assisting the quick completion of tasks, enabling greater job control, improving work performance, eliminating mistakes, and boosting work efficiency (Isaac, Abdullah, Ramayah, Mutahar, & Alrajawy, 2016; Norzaidi et al., 2007). In this research, the effect of performance is described as the extent to which online learning influences student performances based on competence, productivity, knowledge acquisition, and resource savings (Isaac et al., 2017).

3. Research methodology

3.1. Proposed conceptual model overview

The associations among the constructs hypothesised for this conceptual model were adapted from related literature on the topic, as previously described. Fig. 1 depicts the proposed scheme, which comprises overall quality (service, system, and information qualities), actual use, user satisfaction, effects on performance (DeLone & Mclean, 2003), compatibility (Cheng, 2015; Islam & Azad, 2015), and task-technology fitness (Goodhue & Thompson, 1995). This conceptual model assesses the associations found among the above-mentioned constructs and presents a set of eleven hypotheses for testing.

3.2. Instrument development

Among the instruments developed for this effort was a survey form with 32 items, In accordance with the information systems research methods, a multiple-item Likert scale was utilised for assessments (B. C. Lee, Yoon, & Lee, 2009). Constructs were subject to measurements with the use of the Likert scale, as suggested from related prior research (Isaac et al., 2017b; Isaac, Abdullah, Ramayah, & Mutahar Ahmed, 2017; Isaac et al., 2017), where 1 denotes 'Strongly Disagree' and 7 denotes 'Strongly Agree'. As all survey respondents were Arabic speakers, survey forms had to be accurately translated from the English into Arabic dialect. Back translations were therefore performed, an approach that is broadly applied in various cross-cultural surveys (Brislin, 1970). Prior research was used to validate measurements for the constructs in this research, as listed in Appendix A. The number of items for each construct is estimated based on guidelines of Hayduk and Littvay (2012) who recommended the use of the few best items.

3.3. Data collection

Survey data was gathered through the personal delivery of self-administered survey forms, during the period October 2016 to April 2017, to various online learning student users who were enrolled in 9 public universities and were frequenting their main libraries. The number of the distributed questionnaires was 800, and the number of the returned sets is 464 of which 448 responses were considered suitable for the analysis. Based on Tabachnick and Fidell (2012) and Krejcie and Morgan (1970), the sampling size was established as sufficient. In comparison with findings from the related literature, the 58% response rate achieved in this research can be considered as very good (Baruch & Holtom, 2008; Cable & Derue, 2002). The deleted survey forms numbered 16, including 13 cases of missing data that involved 15% or more unresolved questions, with 3 featuring straight lines. The respondents demographics illustrated in Table 1.

4. Data analysis and results

The Structural Equation Modelling-Variance Based (SEM-VB) method using Partial Least Squares (PLS) was used in the

Table 1
Respondents demographic.

Demographic Item	Categories	Frequency	Percentage
Gender	1. Male	240	53.5
	2. Female	208	46.4
Marital Status	1. Single	379	84.6
	2. Married	53	11.8
	3. Divorced	5	1.1
	4. Widowed	1	0.2
	5. Others	10	2.2
Age	1. Less than 20 years	85	19.0
	2. 20–29 years	343	76.6
	3. 30–39 years	16	3.6
	4. 40–49 years	3	0.7
	5.50 years and above	1	0.2
Education Background	1. High School	218	48.7
	2. Diploma	51	11.4
	3. Bachelor Degree	156	34.8
	4. Master Degree	11	2.5
	5. Ph.D./DBA Degree	3	0.7
	6. Others	9	2.0
Faculty	1. Applied Science	356	79.4
	2. Social, Humanities & Art	92	20.5

examination of the research models devised for this study, via operation of the SmartPLS 3.0 application module (Ringle, Wende, & Becker, 2015). The dual-stage analytical approach (Anderson & Gerbing, 1988; Hair, Hult, Ringle, & Sarstedt, 2017) that comprised (i) evaluations of current measurement models and (ii) evaluations of current structural models was applied after carrying out descriptive analyses. This two-stage analytical approach comprising a measurement model and a structural model evaluation is better than a one-step evaluation (Hair, Black, Babin, & Anderson, 2010; Schumacker & Lomax, 2004). The measurement models describe the measurements of constructs and structural models define the relationships among constructs in structural models (Hair et al., 2017).

The application of the PLS method for assessing the structural and measurement models used in this study is due to the technique's capacity for performing simultaneous analyses, which results in more accurate assessments (Barclay, Higgins, & Thompson, 1995).

4.1. Descriptive analysis

Standard deviation and mean of all variables are shown in Table 3. All survey respondents were asked to specify their individual perceptions in accordance with a 7-point scale, with scoring that ranged from 7 (strongly agree) to 1 (strongly disagree). Information quality scored the highest, with an average of 5.088 out of 7.0 and standard deviation of 1.447.

4.2. Assessment of measurement model

Construct validity and reliability (comprising convergent as well as discriminant validity) were used in tests of the measurement models. Cronbach's alpha coefficients were evaluated to determine the reliability of all the core variables in this study's measurement scheme (construct reliability). The value of every individual Cronbach's alpha coefficient in this research fell in-between 0.818 and 0.959, which exceeds the suggested value 0.7 (Nunnally & Bernstein, 1994; Kannana & Tan, 2005). Additionally, the value of every composite reliability (CR) factor fell in-between 0.905 and 0.965, which exceeds 0.7 (Gefen, Straub, & Boudreau, 2000; Kline, 2010; Werts, Linn, & Jöreskog, 1974). Therefore, as illustrated in Table 2, construct reliability has been satisfied as CR and Cronbach's Alpha were relatively error-free for all the constructs.

Assessment of *Indicator reliability* was done by using factor loadings. While associated indicators show a common basis, the condition is captured within the constructs and further implied by the high loadings observed on such constructs (Hair et al., 2017). Based on Hair et al. (2010), values that exceed 0.70 would indicate meaningful factor loadings. Table 2 depicts every item in this research as having factor loadings above the suggested value 0.7, although item INFQ5 was excluded as it was eliminated from the scale due to low loading values.

Average variance extracted values (AVE) were used in this research to assess *Convergent validity*, which indicates the degree to which the measures correlate positively with corresponding alternative measures of the identical construct. The value for every AVE fell in-between 0.713 to 0.846, which exceeds the suggested value 0.50 (Hair et al., 2010). Therefore, all constructs have fulfilled the convergent validity satisfactorily, as illustrated in Table 2.

Fornell-Larcker, cross-loadings, and heterotrait-monotrait ratios (HTMT) were utilised in assess discriminant validities. Cross-loadings are typically utilised as the initial step in tests for indicators' discriminant validity (Hair et al., 2017). In this research, the outer loadings from various indicators on the construct exceed that of every cross-loading with further constructs. The cross-loading criterion therefore can be said to satisfy the requirements (see Table 3).

Table 2
Descriptive and measuerment assessment results.

First-order constructs	Second-order construct	Item	Indicators	Loading (> 0.5)	M	SD	A (> 0.7)	CR (> 0.7)	AVE (> 0.5)
System quality (SYSQ)		SYSQ1	- Easy to use	0.872	4.773	1.601	0.848	0.908	0.767
		SYSQ2	- Flexible	0.885					
		SYSQ3	- Understandable	0.871					
Information quality (INFQ)		INFQ1	- Up-to-date	0.857	5.088	1.447	0.870	0.911	0.719
		INFQ2	- Accurate	0.823					
		INFQ3	- Relevant	0.850					
		INFQ4	- Comprehensive	0.864					
		INFQ5	- Organized	Deleted					
Service Quality (SERQ)		SERQ1	- Responsiveness	0.894	4.824	1.504	0.875	0.923	0.800
		SERQ2	- Functionality	0.915					
		SERQ3	- Interactivity	0.874					
	Overall Quality (QUL)	SYSQ	- System quality	0.865	4.930	1.327	0.926	0.906	0.763
		INFQ	- Information quality	0.920					
		SERQ	- Service quality	0.834					
Compatibility (CMP)		CMP1	- Compatible with values	0.876	4.460	1.493	0.843	0.905	0.761
		CMP2	- Compatible with lifestyle	0.872					
		CMP3	- Compatible with needs	0.868					
Actual usage (USE)		USE1	- Frequency of usage	0.920	4.286	1.223	0.818	0.916	0.846
		USE2	- Duration of use	0.919					
User satisfaction (SAT)		SAT1	- Satisfied with the decision	0.923	4.679	1.559	0.915	0.946	0.845
		SAT2	- Meet the expectations	0.928					
		SAT3	- Overall satisfaction	0.921					
Task-technology fit (TTF)		TTF1	- Fits with the study style	0.894	4.490	1.601	0.855	0.912	0.775
		TTF2	- Suitable for assignments	0.894					
		TTF3	- Necessary for work tasks	0.853					
Performance impact (PI)		PI1	- Time saving	0.865	4.747	1.382	0.959	0.965	0.732
		PI2	- Effort saving	0.875					
		PI3	- Cost saving	0.811					
		PI4	- Improves performance	0.871					
		PI5	- Enhances effectiveness	0.871					
		PI6	- Eliminate errors	0.854					
		PI7	- Realize future target	0.853					
		PI8	- Acquire new knowledge	0.860					
		PI9	- Acquire new skills	0.859					
		PI10	- Come up with innovative ideas	0.835					

Note: AVE = Average Variance Extracted, CR = Composite Reliability, α = Cronbach's alpha, SD = Standard Deviation, M = Mean.

Table 4 shows the findings for discriminant validity obtained through use of the Fornell-Larcker criterion. The square roots of the AVEs upon the diagonals (as depicted in bold) were found to be greater than that for the correlations among constructs (respective rows and columns), which is normally an indication of strong correlations among constructs and their corresponding indicators, in comparison with the other constructs within the model (Chin, 1998a,b; Fornell & Larcker, 1981). According to Hair et al. (2017), this indicates a good discriminant validity. Furthermore, the exogenous constructs have a correlation of less than 0.85 (Awang, 2014). Therefore, all constructs had their discriminant validity fulfilled satisfactorily.

The use of Fornell-Larcker criteria tends to be subject to debate, as the approach offers no capability for determining the absence of discriminant validity in regular research contexts with precision (Henseler, Ringle, & Sarstedt, 2015). Consequently, another method was recommended, namely HTMT ratios of correlations, in accordance with multitrait-multimethod matrices. HTMT was therefore utilised in tests for discriminant validity in this research. Discriminant validity presents certain issues whenever HTMT values are found to be above the $HTMT_{0.90}$ value of 0.90 (Gold, Malhotra, & Segars, 2001), or the $HTMT_{0.85}$ value of 0.85 (Kline, 2010). Nevertheless, Table 5 displays every HTMT value as lower than 0.85, which satisfies the discriminant validity requirement.

4.3. Assessment of structural model

Structural models are tested through computations of beta (β), R^2, and respective *t*-values with use of a bootstrapping technique, according to a resampling of 5000 (Hair et al., 2017). They also assert on the importance of effect sizes (f^2) and the predictive

Table 3
Cross loading results.

	SYSQ	INFQ	SERQ	CMP	USE	SAT	TTF	PI
SYSQ1	**0.872**	0.655	0.508	0.420	0.425	0.470	0.264	0.433
SYSQ2	**0.885**	0.580	0.498	0.424	0.471	0.526	0.355	0.459
SYSQ3	**0.871**	0.650	0.500	0.512	0.493	0.535	0.367	0.480
INFQ1	0.656	**0.857**	0.603	0.475	0.528	0.546	0.353	0.567
INFQ2	0.576	**0.823**	0.446	0.440	0.413	0.451	0.324	0.487
INFQ3	0.581	**0.850**	0.582	0.523	0.501	0.559	0.421	0.550
INFQ4	0.622	**0.864**	0.552	0.462	0.406	0.496	0.345	0.491
SERQ1	0.512	0.564	**0.894**	0.465	0.397	0.495	0.363	0.494
SERQ2	0.522	0.588	**0.915**	0.464	0.445	0.503	0.371	0.517
SERQ3	0.504	0.581	**0.874**	0.443	0.481	0.503	0.335	0.567
CMP1	0.473	0.505	0.455	**0.876**	0.450	0.542	0.460	0.523
CMP2	0.425	0.448	0.427	**0.872**	0.445	0.519	0.450	0.494
CMP3	0.450	0.511	0.455	**0.868**	0.478	0.546	0.463	0.537
USE1	0.493	0.499	0.458	0.476	**0.920**	0.602	0.401	0.656
USE2	0.479	0.506	0.449	0.490	**0.919**	0.601	0.372	0.619
SAT1	0.530	0.559	0.539	0.555	0.620	**0.923**	0.485	0.693
SAT2	0.574	0.592	0.544	0.601	0.621	**0.928**	0.493	0.679
SAT3	0.508	0.526	0.463	0.547	0.569	**0.921**	0.446	0.645
TTF1	0.391	0.405	0.367	0.532	0.420	0.510	**0.894**	0.503
TTF2	0.326	0.372	0.375	0.446	0.367	0.428	**0.894**	0.471
TTF3	0.263	0.341	0.306	0.398	0.315	0.412	**0.853**	0.436
PI1	0.452	0.542	0.496	0.527	0.612	0.637	0.520	**0.865**
PI2	0.469	0.556	0.522	0.552	0.603	0.636	0.500	**0.875**
PI3	0.450	0.513	0.508	0.493	0.562	0.601	0.384	**0.811**
PI4	0.476	0.556	0.537	0.506	0.588	0.644	0.469	**0.871**
PI5	0.455	0.517	0.499	0.515	0.591	0.642	0.463	**0.871**
PI6	0.481	0.547	0.502	0.575	0.592	0.648	0.485	**0.854**
PI7	0.436	0.525	0.503	0.476	0.616	0.597	0.467	**0.853**
PI8	0.417	0.516	0.512	0.510	0.610	0.619	0.433	**0.860**
PI9	0.404	0.508	0.493	0.452	0.592	0.594	0.410	**0.859**
PI10	0.421	0.503	0.456	0.460	0.562	0.605	0.419	**0.835**

Key: SYSQ: system quality, INFQ: information quality, SERQ: service quality, CMP: compatibility, USE: actual usage, SAT: user satisfaction, TTF: task-technology fit, PI: performance impact.

Table 4
Fornell-Larcker criterion results.

	Factors	1	2	3	4	5	6
		CMP	PI	QUL	SAT	TTF	USE
1	CMP	**0.872**					
2	PI	0.594	**0.856**				
3	QUL	0.607	0.661	**0.873**			
4	SAT	0.615	0.728	0.667	**0.924**		
5	TTF	0.525	0.535	0.459	0.515	**0.880**	
6	USE	0.525	0.693	0.598	0.654	0.420	**0.920**

Note: The square root of the average variance extracted are represented diagonals and the other values represent the correlations.
Key: QUL: overall quality, CMP: compatibility, USE: actual usage, SAT: user satisfaction, TTF: task-technology fit, PI: performance impact.

Table 5
HTMT results.

	Factors	1	2	3	4	5	6
		CMP	PI	QUL	SAT	TTF	USE
1	CMP						
2	PI	0.658					
3	QUL	0.688	0.703				
4	SAT	0.699	0.776	0.725			
5	TTF	0.613	0.585	0.514	0.577		
6	USE	0.633	0.782	0.689	0.755	0.499	

Key: QUL: overall quality, CMP: compatibility, USE: actual usage, SAT: user satisfaction, TTF: task-technology fit, PI: performance impact.

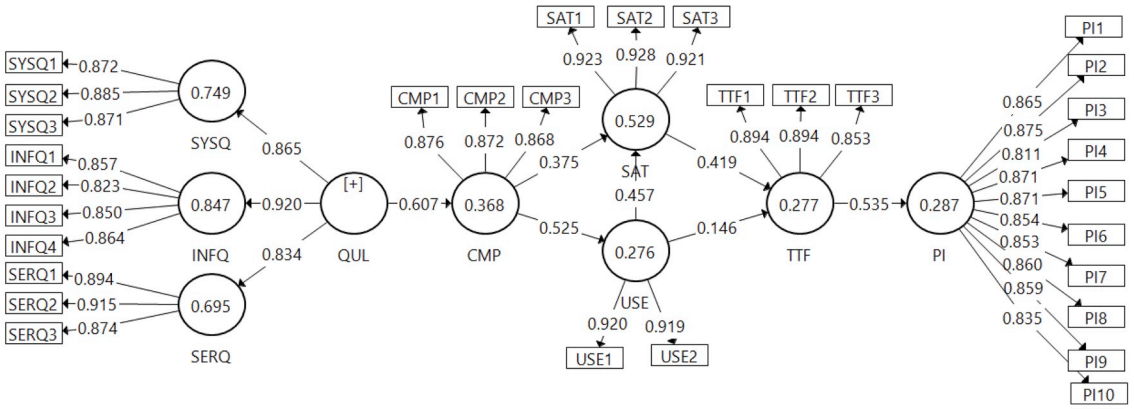

Key: SERQ: service quality, INFQ: information quality, SYSQ: system quality , QUL: overall quality, CMP: compatibility, SAT: user satisfaction ,USE: actual usage, TTF: task-technology fit, PI: performance impact.

Fig. 2. PLS algorithm results
Key: SERQ: service quality, INFQ: information quality, SYSQ: system quality, QUL: overall quality, CMP: compatibility, SAT: user satisfaction,USE: actual usage, TTF: task-technology fit, PI: performance impact.

relevance (Q^2). While p-value ascertains the existence of the effect, the effect size is not shown (Sullivan & Feinn; 2012).

4.3.1. Hypotheses tests

Fig. 2 and also Table 6 show structural modelling assessments that display the findings of the various hypotheses tests, with each hypothesis confirmed. Overall quality meaningfully predicts compatibility, therefore H1 is acceptable given that ($\beta = 0.607$, $t = 16.573$, $p < 0.001$). Compatibility meaningfully predicts user satisfaction and real usage in turn, with both H2 and H3 correspondingly confirmed with ($\beta = 0.525$, $t = 14.119$, $p < 0.001$) and with ($\beta = 0.375$, $t = 9.391$, $p < 0.001$). These findings are similar to that for user satisfaction and real usage, both of which meaningfully influence task-technology-fit and user satisfaction. Therefore, both H4 and H5 are correspondingly confirmed with ($\beta = 0.457$, $t = 11.661$, $p < 0.001$) and with ($\beta = 0.146$, $t = 2.761$, $p < 0.01$). User satisfaction also meaningfully predicts task-technology-fit, and therefore H6 is confirmed with ($\beta = 0.419$, $t = 8.249$, $p < 0.001$), whereas task-technology-fit meaningfully predicts impacts on performance, and hence H7 is accepted with ($\beta = 0.535$, $t = 13.441$, $p < 0.001$).

Baron and Kenny (1986) argued that variable functions may be utilised as mediators if these satisfy certain criteria as follows: (1) Predictor variables must be capable of predicting outcome variables without mediators; (2) Predictor variables must be capable of predicting mediators; (3) Mediator variables must be capable of predicting outcome variables; and (4) Predictor variables should not effectually predict outcome variables whenever mediators are included in the models. Hayes (2009) noted some issues existing in the Baron and Kenny approach and also proposed some solutions (Hayes, 2013). They tested the mediatory effects and determined the indirect effect with the help of the bootstrapping process.

Hair et al. (2017) stated that before other researchers test the mediating effects, they have to implement the Preacher and Hayes (2004; 2008) and then bootstrap the sample distribution for all the indirect and direct effects. The bootstrapping technique does not presume the shapes or statistics of the variable distributions and can be confidently applied to smaller sample sizes. Furthermore, this approach displays better statistical power in comparison to the Sobel test. This study tested the mediatory effect, as stated by Preacher and Hayes (2004, 2008), using the bootstrapping process using a resample size of 2,000, which bootstraps all indirect

Table 6
Structural assessment result.

Hypothesis	Relationship	Std Beta	Std Error	t-value	p-value	LL	UL	Decision	R^2	f^2	Q^2	VIF
H1	QUL→CMP	0.607	0.037	16.573	0.000	0.523	0.67	Supported	0.37	0.583	0.259	1.000
H2	CMP→USE	0.525	0.037	14.119	0.000	0.443	0.591	Supported	0.28	0.381	0.216	1.000
H3	CMP→SAT	0.375	0.040	9.391	0.000	0.294	0.45	Supported	0.53	0.216	0.414	1.381
H4	USE→SAT	0.457	0.039	11.661	0.000	0.379	0.535	Supported		0.321		1.381
H5	USE→TTF	0.146	0.053	2.761	0.006	0.039	0.248	Supported	0.28	0.017	0.191	1.747
H6	SAT→TTF	0.419	0.051	8.249	0.000	0.314	0.509	Supported		0.139		1.747
H7	TTF→PI	0.535	0.040	13.441	0.000	0.448	0.607	Supported	0.29	0.402	0.187	1.000
H8	QUL→CMP→USE	0.319	0.036	8.766	0.000	0.243	0.384	Supported				
H9	QUL→CMP→SAT	0.373	0.037	10.184	0.000	0.301	0.439	Supported				
H10	USE→TTF→PI	0.181	0.034	5.368	0.000	0.117	0.246	Supported				
H11	SAT→TTF→PI	0.224	0.036	6.185	0.000	0.154	0.291	Supported				

Key: QUL: overall quality, CMP: compatibility, SAT: user satisfaction, USE: actual usage, TTF: task-technology fit, PI: performance impact.

effects.

In this research, all tests for any indirect influences of overall quality on actual use via compatibility were conducted in accordance with Preacher and Hayes (2004) and Preacher and Hayes (2008) methods of bootstrapping indirect effects. The findings from bootstrapping analyses are shown in Table 6, with the results implying that the indirect influence with β = 0.319 is meaningful with its t-value equal to 8.766. Furthermore, the method of Preacher and Hayes (2008) would indicate the trend, with 0.319, 95% Boot CI: [LL = 0.243, UL = 0.384], as not overlapping zero in-between the values that specify for mediation. It was therefore determined that compatibility has a meaningful mediating effect between actual usage and overall quality, and therefore H8 is confirmed. The indirect influence of overall quality on user satisfaction via compatibility and with β = 0.373 is meaningful with its t-value equal to 10.184. With 0.373, 95% Boot CI: [LL = 0.301, UL = 0.439], the trend does not overlap zero in-between the values, which indicates the presence of mediation. It was determined that compatibility has a meaningful mediating effect between user satisfaction and overall quality, and therefore H9 is also confirmed. The indirect influence of actual usage on performance via TTF where β = 0.181 is meaningful with its t-value equal to 5.368. With 0.181, 95% Boot CI: [LL = 0.117, UL = 0.246], the trend does not overlap zero between the values, which shows a mediating effect. The mediating influence of the task-technology-fit thus has a meaningful relationship between actual use and impacts on performance, and therefore H10 is confirmed. The indirect influence of user satisfaction on the impact in performance, based on TTF with β = 0.224 is meaningful, with its t-value equal to 6.185. With 0.224, 95% Boot CI: [LL = 0.154, UL = 0.291], the trend does not overlap zero between the values, which shows a mediating effect. The mediating influence of the task-technology-fit therefore has a meaningful association between performance and user satisfaction, and therefore H11 is similarly confirmed.

Some 37% of this variation in terms of compatibility can be described by overall quality, while compatibility describes some 28% of this variation in terms of actual usage. Actual usage and compatibility can jointly describe some 53% of this variation in terms of user satisfaction, whereas user satisfaction and actual usage can describe some 28% of this variation in terms of task-technology-fit. The last can in turn explain some 29% of this variation in terms of performance impacts. The R^2 values feature acceptable levels of explanatory power, which does indicate a significant model (Cohen, 1988; Chin, 1998a,b).

Effects sizes (f^2) were examined in this study. Based on Gefen and Ringdon (2011), the effects size f^2 determines the impact of exogenous latent constructs (whether weak, moderate, or substantial) on endogenous latent constructs. Assessment is normally suggested for changes in R^2 values (Hair et al., 2017). The obtained f^2 value of 0.35 denotes large effect, 0.15 denotes medium effect, and 0.02 denotes small effect (Cohen, 1988). Table 6 shows all f^2 results according to effects sizes: three relationships (large), two (medium), and all remaining associations (small).

In the assessment of predictive relevance for the proposed research model, the researchers implemented the blindfolding technique. This method is best utilised on endogenous constructs using only reflective measurements (Hair et al., 2017). Based on Fornell and Cha (1994) as well as Hair et al. (2017), certain endogenous constructs of suggested models will have predictive relevance if their values of Q^2 exceed zero. In this research, every Q^2 value was established as non-zero, therefore it may be concluded that our suggested model does feature acceptable predictive relevance (see Table 6). Relative measures of predictive relevance are denoted by Q^2 values of 0.02 (small), 0.15 (medium), and 0.35 (large). In this research, one particular endogenous construct was established with a large predictive relevance, whereas the others presented medium values.

Based on O'brien (2007), multicollinearity presents a problem, for it points to an overlapping of variances that exogenous constructs will describe in terms of endogenous constructs. Consequently, each variance cannot be justified in its presence, in terms of the endogenous variable. The variance inflation factor (VIF) is broadly utilised in measurements to determine the degree of multicollinearity present (O'brien, 2007). A value exceeding 10 for the largest VIF indicates a problem (Myers, 1990; Bowerman, 1990). Meanwhile, Hair et al. (2017) suggested that a value exceeding 5 for the largest VIF indicates a multicollinearity problem. The VIF values in this study are between 1.000 and 1.747 (i.e. less than 5), and hence, multicollinearity issue is absent in this (see Table 6).

4.3.2. Importance-performance map analysis (IPMA)

IPMA was applied as a post-hoc PLS process in this research, with the impact on performance utilised to construct outcomes. IPMA has the capacity to provide estimations of total effects in correspondence to the salience of predecessor constructs in influencing target constructs (impacts on performance); the average scores of the latent variables correspond to student performance, while calculation of the index values' (performance scoring) was carried out via the rescaling of the scores of all latent constructs, within values ranging from 100 (highest performance) to 0 (lowest) (Hair et al., 2017). IPMA enhances the results of PLS analysis (Ringle & Sarstedt, 2016) because it gives attention to the latent constructs' average value as well as their indicators (the performance dimension) in addition to performing the path coefficients analysis (the importance dimension). All index values (performance) and total effect values (importance) of the IPMA for the outcome construct termed the 'performance impact' are displayed in Table 7.

Table 7
Results of IPMA.

Latent constructs	Performance impact total effect (Importance)	Index values (Performance)
Overall Quality (QUL)	0.109	66.028
Compatibility (CMP)	0.179	57.732
Actual Usage (USE)	0.181	54.766
User Satisfaction (SAT)	0.224	61.274
Task-Technology Fit (TTF)	0.535	58.046

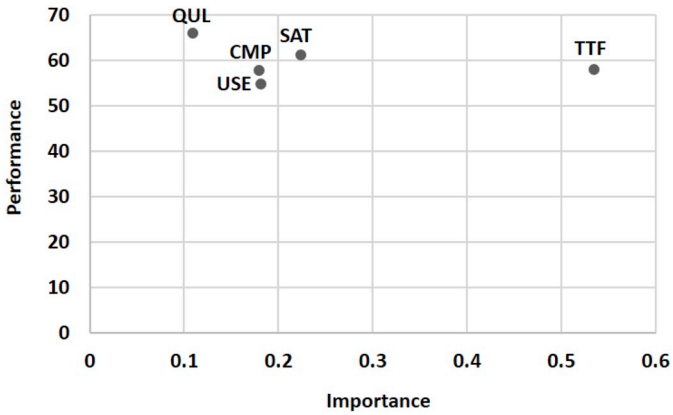

Key: QUL: overall quality, CMP: compatibility, SAT: user satisfaction, USE: actual usage, TTF: task-technology fit

Fig. 3. Performance impact construct priority map
Key: QUL: overall quality, CMP: compatibility, SAT: user satisfaction, USE: actual usage, TTF: task-technology fit

The scores for the total effects and for index values were then plotted on priority maps (see Fig. 3). It was noted that task-technology-fit remains critical in determining impacts on performance, as the result of its comparatively greater importance in comparison with that of other constructs within the proposed model.

While there exists an apparent gap on the importance of factors for determining performance impact, these factors have similar performance. IPMA is designed to identify those predecessors which present comparatively high importance (featuring strong total effects) and also comparatively lower performance for target constructs (featuring low average scores of the latent variables) (Hair et al., 2017). Emphasis should be placed on the properties of these particular constructs, as these may offer potential grounds for improvement. For performance to improve, it can therefore be said that the managerial focus should be on improving educational conditions based on task-technology-fit.

5. Discussion

This research established that overall quality produces meaningful positive effects on compatibility, which implies that the higher the quality of the online learning, based on its ease of use, functionality, flexibility, interactivity, and responsiveness in delivering comprehensive, updated, relevant, and accurate information, the more student users would feel that the service aligns with their values, needs, and lifestyles.

Furthermore, the findings demonstrate that compatibility has meaningful positive effects on actual usage, which implies that the more users view online learning as matching their needs, values, and lifestyles, the longer the duration and the greater the rate of their online learning usage. This is in line with previous studies (Ainin, Parveen, & Moghavvemi, 2015; and; Cheng, 2015).

Similarly, it was established that compatibility has meaningful effects on user satisfaction, which implies that the more users view online learning as matching their needs, values, and lifestyles, the higher the satisfaction in online learning as meeting users' expectations, as well as the greater the individual perception that students have made a good decision to rely on online learning.

The research demonstrates that overall quality via compatibility does have indirect effects on the actual usage of the student population of nine public universities within Yemen. Plainly stated, the more online learning offers flexibility, interactivity, responsiveness, reliability and ease of use in the access of accurate and updated information, the more the student users increase the duration and rate of usage of online learning, since the students view online learning as aligned with their individual needs, values, and lifestyles. As well, overall quality through compatibility has indirect effects on user satisfaction amongst the student population of nine public universities within Yemen. Namely, the more that online learning offers flexibility, interactivity, responsiveness, reliability and ease of use in the access of accurate and updated information, the more the students are pleased about having made a good decision to rely on online learning, since the students would view the online learning as aligned with their individual needs, values, and lifestyles.

Actual use and user satisfaction also have a meaningful effect on TTF. This follows, for once students believe online learning to be necessarily of help in completing academic tasks, in that the method fits the ways in which they learn things and usage and satisfaction consequently rises, such enhanced conditions should eventually translate into improved performance. Similarly, it was established that TTF meaningfully affects performance, a finding that corresponds with that of other studies (D'Ambra et al., 2013; Gatara & Cohen, 2014; and; Glowalla & Sunyaev, 2014).

It was also shown in this research that both actual use and user satisfaction have indirect effects on online learning performances through TTF on the student population of nine public universities within Yemen. Namely, the greater the satisfaction in the services as meeting users' expectations, the more they will raise their duration and rate of usage and also the more the online learning improves academic proficiency and coursework productivity, providing that the practice fits the ways in which they learn things and is viewed as necessary in the performance of academic tasks.

Mediation effects provide a basis for the inconsistent findings of direct relationships among the three suggested variables, as stated by Cho et al. (2015); Khayun and Ractham (2011); Norzaidi (2008); and Wu and Wang (2006). This is similarly understood in the implication that, when students within Yemeni public universities raise their duration and rate of usage while satisfied with their system, the situation will enhance the ways in which they learn things. Such success will raise awareness of the practice as being appropriate for accomplishing academic coursework. This trend would ultimately reflect improvements in student performances in three key areas: efficiency (accomplishing coursework quickly and more easily while saving money), knowledge acquisition (acquiring advanced information and skillsets, innovating ideas, and assisting in learning) and productivity (educational productivity and learning performance), all while reasonably improving the fourth dimension of competency (eliminating errors and realising future goals).

Based on performance-importance map analyses, TTF was determined to be the primary antecedent with the most meaningful effects on the academic performances of students, followed by users' satisfaction, actual usage, and finally, compatibility. Therefore, policy makers must prioritise consideration of TTF in the promotion and implementation of online learning practices in Yemeni public universities.

6. Implications

6.1. Implications for research

Online learning practices have been widely studied on the basis of technology adoption. In this research, we offer some clarity about post-usage models. As well as effectively extending the Delone & Mclean model of informational success, the practice has been implemented in more advanced settings that host various online learning settings within Yemen. Also validated in this research is a particular second-order model for overall quality, which was devised in order to increase the model's validity and which contains three first-order constructs, namely the system, information, and service qualities. The Delone & Mclean model of information success is extended through the addition of TTF and compatibility variables for the purpose of creating a rigid model for use in newer contexts. This use of TTF and compatibility as mediating constructs is apparently one of the first attempted within the context of local online learning practices. It may therefore be considered to contribute significantly to the local body of IS expertise on the subject.

6.2. Implication for practice

The education sector in Yemen faces hard challenges. The Global Competitiveness Report (2017) has the country ranked 116 among 138 countries on the basis of enrolment rates in tertiary educational institutes. A gender gap is also evident in enrolment figures, as evidenced in the reported educational indicators for Educational indicators of Yemen (2015), wherein the numbers of female student enrolees within public universities lag behind that of male enrolees by some 50% (M = 148834, F = 78329). Online learning would be helpful in mitigating such difficulties, since based on UNESCO (2013), one of the key features of online learning is its expansion of educational reach and equity.

Yemen, with its scarce resources, remains a low-income country in the developing world (World Development Indicators, 2017), although it can exploit online learning advantages so as to make available higher quality tertiary education using the limited resources available (Dokhan & Akkoyunlu, 2016; and; Yang, Quadir, Chen, & Miao, 2016). Modern online learning improves administration and communications, enables learning anywhere and at any time, and ultimately promotes educational equity.

The country scored rather poorly (11.2 out of 100) in the latest Global Innovation Index (2017) in its ICT usage indicator, with the exception of mobile devices where Yemen features a network subscription rate of 67.98% for every 100 persons (World Development Indicators, 2017). Numerous governments worldwide have effectively expanded their nations' educational opportunities through the leveraging of the advanced devices that the majority of their citizens already possess, instead of having to provide the latest devices (UNESCO, 2013). It appears that governmental agencies in Yemen have an opportunity to encourage online learning via advanced mobile technologies. Numerous researchers have emphasised the advantages, including the savings in effort and time, improved learning effectiveness, availability of accurate and updated information, access to multimedia content, as well as the provision of highly responsive and interactive communications (Almaiah, Jalil, & Man, 2016; Domingo & Garganté, 2016; Isaac et al., 2017b; and; Isaac et al., 2017c).

These findings may well be useful for YCIT-HE, and not just for student users but also for university staff and management, as the results emphasise the key capacities of these newer technologies for resolving many of the difficulties found in Yemen's higher education sector. In this regard, it has been encouraging for us to support the advance of the country's master plan for tertiary education at the organisational and higher levels (Al-Madhagy, 2013).

Since TTF and compatibility together mediate relationships among overall quality, user satisfaction, actual usage, and academic performance, it is vital for university management to integrate online learning approaches in their teaching strategies, while evaluating what features align best with the users' needs, values, and lifestyles in the design of online courses.

7. Limitations and suggestions for future work

Although the study provides positive fresh perspectives for theory as well as practice, it does have certain drawbacks. First, the study populace covered only pupils from nine public universities, and it did not include administrative and academic staff. Second, as the research was cross-sectional, it might not be able to track the change in beliefs of students following the experience obtained from

online learning. Third, the work is reliant on self-reported actions for putting the recommended research model to test. The reason behind this is that obtaining objective data regarding performance was not likely because of privacy issues. This might negatively impact the significance of the observations to alternative scenarios. Therefore, the observations should be carefully exercised.

Furthermore, researchers can examine the outcomes through organisational performance instead of individual performance. Moreover, a moderating function of culture with regards to individualism/collectivism may exist, making it a feasible area for academics to investigate. Considering the swift progresses in technology, it might be advantageous to substantiate the observations in longitudinal settings for ascertaining how technology innovations impact the usage of online learning.

8. Conclusion

The current progresses in online technology have had a crucial influence on education delivery, moulding the manner in which learning will be carried out in the future. In view of the issues faced by the higher education sector in Yemen, such as substandard infrastructure and education, increasing student populace, and inadequate resources (Isaac, Masoud, Samad, & Abdullah, 2016; Mutahar et al., 2016), this study scrutinised the mediation function of task-technology fit and compatibility in the Delone & Mclean information system success model among pupils from nine public universities in the country. The results indicated that the recommended framework was effective in exhibiting the constructs of the effect of online learning on the academic performance of students. Furthermore, compatibility is extremely crucial when it comes to estimating user contentment and actual use of online learning, and facilitating the relationship between inclusive quality and user contentment and actual use. TTF also plays a crucial part in projecting academic performance and its facilitation role between user contentment and actual usage. Experts should emphasise on these aspects for maximising the likelihood of improved performance. Finally, these findings can represent a significantly support any Yemeni government initiatives in the higher education sector to create an environment that fits with student values, lifestyles and tasks, in which students are more likely to use online learning to enhance their academic professionalism and ultimately the quality of their working life. The implications of this study from the perspective of research and practitioners have been deliberated, besides and limitations and some directions for future research have been discussed.

Appendix

Appendix A
Instrument for varibles

Varible	Measure	Source
System Quality (-SYSQ)	SYSQ1: I find the online learning to be easy to use. SYSQ2: I find the online learning to be flexible to interact with. SYSQ3: My interaction with the online learning is clear & understandable.	(Mohammadi, 2015; Ngai, Poon, & Chan, 2007; Zhou, 2011)
Information Quality (INFQ)	INFQ1: Online learning provides up-to-date knowledge. INFQ2: Online learning provides accurate knowledge. INFQ3: Online learning provides relevant knowledge. INFQ4: Online learning provides comprehensive knowledge. INFQ5: Online learning provides organized knowledge.	(Lin et al., 2011; Lin & Wang, 2012; Mohammadi, 2015)
Service Quality (SERQ)	SERQ1: I could use the online learning services at anytime, anywhere I want. SERQ2: Online learning offers multimedia (audio, video, and text) types of course content. SERQ3: Online learning enables interactive communication.	(Lin et al., 2011; Pituch & Lee, 2006)
Compatibility (C-MP)	CMP1: Online learning is compatible with my values CMP2: Online learning is compatible with my lifestyle. CMP3: Online learning is compatible with my needs.	(Ifinedo, 2012; Rui-jin, Guo-xin, & Ze-zhou, 2014)
Actual usage (U-SE)	USE1: On average, how frequently do you use the online learning? ☐ Certainly not ☐ Less than once a month ☐ Once a month ☐ A few times a month ☐ A few times a week ☐ About once a day ☐ Several times a day USE2: On average, how much time do you spend per week using the online learning? ☐ Certainly not ☐ Almost never ☐ less than 2 h ☐ 2–4 h ☐ 4–6 h ☐ 6–8 h ☐ More than 8 h	Kim, Chan, et al. (2007)
User Satisfaction (SAT)	SAT1: My decision to use the online learning was a wise one. SAT2: The online learning has met my expectations. SAT3: Overall, I am satisfied with the online learning.	(Huang, 2008; Sun, Tsai, Finger, Chen, & Yeh, 2008; Wang, 2008)
Task-technology fit (TTF)	TTF1: Online learning fits with the way I like to learn and study. TTF2: Online learning is suitable for helping me complete my academic assignments. TTF3: Online learning is necessary to my academic tasks.	(Lu & Yang, 2014; McGill & Klobas, 2009; Negahban & Chung, 2014)

(*continued on next page*)

Appendix A (*continued*)

Varible	Measure	Source
Performance impact (PI)	PI1: Online learning helps me to accomplish my tasks more quickly. PI2: Online learning makes it easier to complete my tasks. PI3: Online learning saves my money. PI4: Online learning improves my learning performance. PI5: Online learning enhances my academic effectiveness. PI6: Online learning helps reviews and eliminate errors in my work tasks. PI7: Online learning helps me to realize my future target. PI8: Online learning helps me acquire new knowledge. PI9: Online learning helps me acquire new skills. PI10: Online learning helps me to come up with innovative ideas.	(Datta, 2011; Gbenga, Victor, Godspower, Solomon, & Janet, 2013; Isaac, Abdullah, Ramayah, & Mutahar, 2017d; Khayun & Ractham, 2011; Kim, Chan, & Gupta, 2007; Liu, Li, & Carlsson, 2010; Wu & Wang, 2006)

References

Ainin, S., Parveen, F., & Moghavvemi, S. (2015). Factors influencing the use of social media by SMEs and its performance outcomes. *Industrial Management & Data Systems, 115*(3), 570–588. https://doi.org/10.1108/IMDS-07-2014-0205.

Al-Absi, A., Peneva, I., & Yordzhev, K. (2017). Student's readiness for E -learning in the universities in Yemen. *Science and Technology Publishing (SCI & TECH), 1*(8), 102–107.

Al-Busaidi, K. A. (2013). An empirical investigation linking learners' adoption of blended learning to their intention of full e-learning. *Behaviour & Information Technology, 32*(11), 1168–1176.

Al-Madhagy, T. (2013). *ICT policy in Yemen.* Sintok: Faculty of Information and Communication Technology, University Utara Malaysia.

Aldholay, A., Abdullah, Z., Ramayah, T., Isaac, O., & Mutahar, A. M. (2018). Online learning usage and performance among students within public universities in Yemen. *International Journal of Services and Standards, 12*(2), 163–179.

Aldholay, A., Isaac, O., Abdullah, Z., Abdulsalam, R., & Al-Shibami, A. H. (2018). An extension of Delone and McLean IS success model with self-efficacy. *International Journal of Information and Learning Technology*. IJILT-11-2017-0116 https://doi.org/10.1108/IJILT-11-2017-0116.

Aldholay, A., Isaac, O., Abdullah, Z., Alrajawy, I., & Nusari, M. (2018). The role of compatibility as a moderating variable in the information system success model: The context of online learning usage. *International Journal of Management and Human Science (IJMHS), 2*(1), 9–15.

Aldholay, A., Isaac, O., Abdullah, Z., & Ramayah, T. (2018). The role of transformational leadership as a mediating variable in DeLone and McLean information system success model: The context of online learning usage in Yemen. *Telematics and Informatics, 35*(5), 1421–1437. https://doi.org/10.1016/j.tele.2018.03.012.

Aldowah, H., Ghazal, S., & Muniandy, B. (2015). Issues and challenges of using E-learning in a Yemeni public university. *Indian Journal of Science and Technology, 8*(32), 1–9. https://doi.org/10.17485/ijst/2015/v8i32/92160.

Almaiah, M. A., Jalil, M.@M. A., & Man, M. (2016). Empirical investigation to explore factors that achieve high quality of mobile learning system based on students' perspectives. *Engineering Science and Technology, an International Journal, 19*(1), 1314–1320. https://doi.org/10.1016/j.jestch.2016.03.004.

Alrajawy, I., Isaac, O., Ghosh, A., Nusari, M., Al-Shibami, A. H., & Ameen, A. (2018). Determinants of student's intention to use mobile learning in Yemeni public universities: Extending the technology acceptance model (TAM) with anxiety. *International Journal of Management and Human Science (IJMHS), 2*(2), 2590–3748.

Alrajawy, I., Daud, N., Isaac, O., & Mutahar, A. (2016). Mobile learning in Yemen public universities: Factors influence student's intention to use. *The 7th international conference on postgraduate education ICPE7* (pp. 1050–1065). .

Alzahrani, L., Al-karaghouli, W., & Weerakkody, V. (2017). Analysing the critical factors influencing trust in e-government adoption from citizens ' perspective : A systematic review and a conceptual framework. *International Business Review, 26*(1), 164–175. https://doi.org/10.1016/j.ibusrev.2016.06.004.

Anderson, J. C., & Gerbing, D. W. (1988). Structural equation modeling in practice: A review and recommended two-step approach. *Psychological Bulletin, 103*(3), 411–423. https://doi.org/10.1037/0033-2909.103.3.411.

Aparicio, M., Bacao, F., & Oliveira, T. (2017). Grit in the path to e-learning success. *Computers in Human Behavior, 66*(1), 388–399. https://doi.org/10.1016/j.chb.2016.10.009.

Aspillera, M. (2010). *What are the potential benefits of online learning?* Retrieved http://www.worldwidelearn.com/education-articles/benefits-of-online-learning.htm, Accessed date: 17 September 2016.

Awang, Z. (2014). *Structural equation modeling using AMOS. Shah Alam.* Malaysia: Penerbit Universiti Teknologi MARA.

Barclay, D. W., Higgins, C., & Thompson, R. (1995). The partial least square (PLS) approach to causal modeling: Personal computer adoption and use as an illustration. *Technology Studies, 2*(2), 285–309.

Baron, R. M., & Kenny, D. A. (1986). The moderator–mediator variable distinction in social psychological-research: Conceptual, strategic, and statistical considerations. *Journal of Personality and Social Psychology, 51*(6), 1173–1182.

Baruch, Y., & Holtom, B. C. (2008). Survey response rate levels and trends in organizational research. *Human Relations, 61*(8), 1139–1160. https://doi.org/10.1177/0018726708094863.

Bowerman, B. L. (1990). *Linear statistical models: An applied approach* (2nd ed.). New York, London: PWS-Kent Pub. Co.

Brislin, R. W. (1970). Back-translation for cross-cultural research. *Journal of Cross-Cultural Psychology, 1*. Brislin https://doi.org/10.1177/135910457000100301.

Cable, D. M., & Derue, D. S. (2002). The convergent and discriminant validity of subjective fit perceptions. *Journal of Applied Psychology, 87*(5), 875–884. https://doi.org/10.1037//0021-9010.87.5.875.

Chang, V. (2015). Review and discussion: E-Learning for academia and industry. *International Journal of Information Management, 36*(3), 476–485. https://doi.org/10.1016/j.ijinfomgt.2015.12.007.

Chen, Y. S. (2013). The study of behavioral intention for mobile commerce- via integrated model of TAM and TTF. *Quality and Quantity, 47*(580), 1009–1020.

Cheng, Y. (2015). Towards an understanding of the factors affecting m-learning acceptance : Roles of technological characteristics and compatibility. *Asia Pacific Management Review, 20*(3), 109–119. https://doi.org/10.1016/j.apmrv.2014.12.011.

Cheng, S. I., Chen, S. C., & Yen, D. C. (2015). Continuance intention of E-portfolio system: A confirmatory and multigroup invariance analysis of technology acceptance model. *Computer Standards & Interfaces, 42*(1), 17–23. https://doi.org/10.1016/j.csi.2015.03.002.

Cheung, R., & Vogel, D. (2013). Predicting user acceptance of collaborative technologies: An extension of the technology acceptance model for e-learning. *Computers & Education, 63*(1), 160–175. https://doi.org/10.1016/j.compedu.2012.12.003.

Chin, W. W. (1998a). Issues and opinion on structural equation modeling. *MIS Quarterly, 22*(1), 7–16.

Chin, W. W. (1998b). *The partial least squares approach to structural equation modeling.* New Jersey: Lawrence Erlbaum295–358.

Chiu, P.-S., Chao, I.-C., Kao, C.-C., Pu, Y.-H., & Huang, Y.-M. (2016). Implementation and evaluation of mobile e-books in a cloud bookcase using the information system success model. *Library Hi Tech, 34*(2), 207–223. https://doi.org/10.1108/LHT-12-2015-0113.

Cho, K. W., Bae, S.-K., Ryu, J.-H., Kim, K. N., An, C.-H., & Chae, Y. M. (2015). Performance evaluation of public hospital information systems by the information system

success model. *Healthcare Informatics Research, 21*(1), 43–48. https://doi.org/10.4258/hir.2015.21.1.43.
Clark, R. C., & Mayer, R. E. (2016). *e-Learning and the Science of Instruction: Proven Guidelines for Consumers and Designers of Multimedia Learning* (4th ed.). London: Wiley.
Cohen, J. (1988). *Statistical power analysis for the behavioral sciences* (2nd ed.). New York: Routledge.
Datta, P. (2011). A preliminary study of ecommerce adoption in developing countries. *Information Systems Journal, 21*(1), 3–32. https://doi.org/10.1111/j.1365-2575.2009.00344.x.
Daud, N., Kassim, N., Said, W., & Noor, M. (2011). Determining critical success factors of mobile banking adoption in Malaysia. *Australian Journal of Basic and Applied Sciences, 5*(9), 252–265.
Davis, F. D. (1989). Perceived Usefulness, Perceived ease of use, and User Acceptence of information technology. *MIS Quarterly, 13*(3), 319–340.
Delone, W. H., & Mclean, E. R. (1992). Information systems success: The quest for the dependent variable. *Information Systems Research, 3*(1), 60–95.
DeLone, W. H., & Mclean, E. R. (2003). The DeLone and McLean model of information systems success: A ten-year update. *Journal of Management Information Systems/Spring, 19*(4), 9–30. https://doi.org/10.1073/pnas.0914199107.
DeLone, W. H., & McLean, E. R. (2016). Information systems success measurement. *Series in information technology management*. now Publishers Inc. PO.
Dokhan, G., & Akkoyunlu, B. (2016). Modeling the continuance usage intention of online learning environments. *Computers in Human Behavior, 60*(1), 198–211. https://doi.org/10.1016/j.chb.2016.02.066.
Domingo, M. G., & Garganté, A. B. (2016). Exploring the use of educational technology in primary education: Teachers' perception of mobile technology learning impacts and applications' use in the classroom. *Computers in Human Behavior, 56*(1), 21–28. https://doi.org/10.1016/j.chb.2015.11.023.
D'Ambra, J., & Wilson, C. S. (2011). Explaining perceived performance of the world wide Web : Uncertainty and the task-technology fit model. *Internet Research, 14*(4), 294–310. https://doi.org/10.1108/10662240410555315.
D'Ambra, J., Wilson, C. S., & Akter, S. (2013). Application of the task-technology fit model to structure and evaluate the adoption of E-books by academics. *Journal of the American Society for Information Science and Technology, 64*(1), 48–64. https://doi.org/10.1002/asi.
Educational indicators of Yemen (2015). *Supreme council for education planning.* Sana'a - Yemen: Ministry of Higher Education.
Fornell, C., & Cha, J. (1994). Partial least squares. In R. P. Bagozzi (Ed.). *Advanced methods in marketing research* (pp. 52–78). Cambridge: Blackwell.
Fornell, C., & Larcker, D. F. (1981). Evaluating structural equation models with unobservable variables and measurement error. *Journal of Marketing Research, 18*(1), 39–50.
Gatara, M., & Cohen, J. F. (2014). The mediating effect of task-technology fit on mHealth tool use and community health worker performance in the Kenyan context. *Proceedings of the 8th international development informatics association conference* (pp. 323–336). .
Gbenga, F., Victor, A., Godspower, E., Solomon, A., & Janet, K. (2013). Adoption of mobile learning among 3g-enabled handheld users using extended technology acceptance model. *World Journal on Educational Technology, 5*(3), 420–430.
Gefen, D., & Rigdon, E. E. (2011). An update and extension to SEM guidelines for administrative and social science research. *MIS Quarterly, 35*(2), 1–7.
Gefen, D., Straub, D., & Boudreau, M.-C. (2000). Structural equation modeling and regression: Guidelines for research practice. *Communications of the Association for Information Systems, 4*(1), 1–79.
Global Innovation Index (2017). *The global innovation index 2017 innovation feeding the world.* WIPO Cornell University INSEAD.
Glowalla, P., & Sunyaev, A. (2014). ERP system fit – an explorative task and data quality perspective. *Journal of Enterprise Information Management, 27*(5), 668–686. https://doi.org/10.1108/JEIM-08-2013-0062.
Gold, A. H., Malhotra, A., & Segars, A. H. (2001). Knowledge management: An organizational capabilities perspective. *Journal of Management Information Systems, 18*(1), 185–214.
Goodhue, D. L., & Thompson, R. L. (1995). Task-technology fit and individual performance. *MIS Quarterly, 19*(2), 213–236.
Hair, J. F., Black, W. C., Babin, B. J., & Anderson, R. E. (2010). *Multivariate data analysis* (7th ed.). New York: Pearson.
Hair, J. F., Hult, G. T. M., Ringle, C., & Sarstedt, M. (2017). *A primer on partial least squares structural equation modeling (PLS-SEM)* (2nd ed.). London: Thousand Oaks: SAGE.
Halonen, R., Acton, T., Golden, W., & Conboy, K. (2009). DeLone & McLean success model as a descriptive tool in evaluating a virtual learning environment. *International conference on organizational learning, knowledge and capabilities* (pp. 16). Amsterdam: OLKC 2009. https://doi.org/10.4018/jissc.2010040103.
Hayduk, L., & Littvay, L. (2012). Should researchers use single indicators, best indicators, or multiple indicators in structural equation models? *BMC Medical Research Methodology, 12*(1), 159–176.
Hayes, A. F. (2009). *Beyond Baron and Kenny: Statistical mediation analysis in the new millennium.* Communication Monographs408–420.
Hayes, A. (2013). *Introduction to mediation, moderation, & conditional process analysis (first).* The Guilford Press.
Henseler, J., Ringle, C. M., & Sarstedt, M. (2015). A new criterion for assessing discriminant validity in variance-based structural equation modeling. *Journal of the Academy of Marketing Science, 34*(1), 115–135.
Hofstede, G., & Minkov, M. (2010). *Cultures and organizations: Software of the mind* (3rd ed.). McGraw-Hill Education.
Ho, L.-A., Kuo, T.-H., & Lin, B. (2010). Influence of online learning skills in cyberspace. *Internet Research, 20*(1), 55–71. https://doi.org/10.1108/10662241011020833.
Hou, C.-K. (2012). Examining the effect of user satisfaction on system usage and individual performance with business intelligence systems: an empirical study of Taiwan's electronics industry. *International Journal of Information Management, 32*(6), 560–573. https://doi.org/10.1016/j.ijinfomgt.2012.03.001.
Huang, E. (2008). Use and gratification in e-consumers. *Internet Research, 18*(4), 405–426. https://doi.org/10.1108/10662240810897817.
Ifinedo, P. (2012). Technology acceptance by health professionals in Canada: An analysis with a modified UTAUT model. *Proceedings of the Annual Hawaii International Conference on System Sciences,* 2937–2946. https://doi.org/10.1109/HICSS.2012.556.
Internet World Stats (2017). *Internet usage as a percentage of population: Yemen vs. Arab countries*.
Iqbal, S., & Qureshi, I. A. (2012). M-Learning adoption: A perspective from a developing country. *International Review of Research in Open and Distance Learning, 13*(3), 147–164.
Isaac, O., Abdullah, Z., Ramayah, T., & Mutahar, A. M. (2017a). Examining the relationship between overall quality, user satisfaction and internet usage: An integrated individual, technological, organizaional and social perspective. *Asian Journal of Information Technology, 16*(1), 100–124.
Isaac, O., Abdullah, Z., Ramayah, T., & Mutahar, A. M. (2017b). Internet usage , user satisfaction , task-technology fit , and performance impact among public sector employees in Yemen. *The International Journal of Information and Learning Technology, 34*(3), 210–241. https://doi.org/10.1108/IJILT-11-2016-0051.
Isaac, O., Abdullah, Z., Ramayah, T., & Mutahar, A. M. (2017c). Internet usage and net benefit among employees within government institutions in Yemen: An extension of Delone and mclean information systems success model (DMISM) with task-technology fit. *International Journal of Soft Computing, 12*(3), 178–198. https://doi.org/10.3923/ijscomp.2017.178.198.
Isaac, O., Abdullah, Z., Ramayah, T., & Mutahar, A. M. (2017d). Internet usage within government institutions in Yemen: An extended technology acceptance model (TAM) with internet self-efficacy and performance impact. *Science International, 29*(4), 737–747.
Isaac, O., Abdullah, Z., Ramayah, T., Mutahar, A. M., & Alrajawy, I. (2016). Perceived usefulness, perceived ease of use, perceived compatibility, and net benefits: An empirical study of internet usage among employees in Yemen. *7th International conference on postgraduate education* (pp. 899–919). Malaysia: Shah Alam.
Isaac, O., Abdullah, Z., Ramayah, T., Mutahar, A. M., & Alrajawy, I. (2017). Towards a better understanding of internet technology usage by Yemeni employees in the public sector: An extension of the task-technology fit (TTF) model. *Research Journal of Applied Sciences, 12*(2), 205–223. https://doi.org/10.3923/rjasci.2017.205.223.
Isaac, O., Masoud, Y., Samad, S., & Abdullah, Z. (2016). The mediating effect of strategic implementation between strategy formulation and organizational performance within government institutions in Yemen. *Research Journal of Applied Sciences, 11*(10), 1002–1013. https://doi.org/10.3923/rjasci.2016.1002.1013.
Islam, A. K. M. N. (2013). Investigating e-learning system usage outcomes in the university context. *Computers & Education, 69*(1), 387–399. https://doi.org/10.1016/j.compedu.2013.07.037.
Islam, A. K. M. N. (2015). E-learning system use and its outcomes: Moderating role of perceived compatibility. *Telematics and Informatics, 33*(1), 48–55. https://doi.

org/10.1016/j.tele.2015.06.010.
Islam, A. K. M. N., & Azad, N. (2015). Satisfaction and continuance with a learning management system. *The International Journal of Information and Learning Technology, 32*(2), 109–123. https://doi.org/10.1108/IJILT-09-2014-0020.
Jung, T., Chung, N., & Leue, M. C. (2015). The determinants of recommendations to use augmented reality technologies: The case of a Korean theme park. *Tourism Management, 49*(1), 75–86. https://doi.org/10.1016/j.tourman.2015.02.013.
Jung, Y., & Lee, J. (2018). Learning engagement and persistence in massive open online courses (MOOCS). *Computers & Education, 122*, 9–22. April 2017 https://doi.org/10.1016/j.compedu.2018.02.013.
Kannana, V. R., & Tan, K. C. (2005). Just in time, total quality management, and supply chain management: Understanding their linkages and impact on business performance. *Omega: International Journal of Management Sciences, 33*(2), 153–162.
Khayun, V., & Ractham, P. (2011). Measuring e-excise tax success factors: Applying the DeLone & McLean information systems success model. *In proceedings of the annual Hawaii international conference on system sciences* (pp. 1–10). (Honolulu).
Kim, H. W., Chan, H. C., & Gupta, S. (2007). Value-based adoption of mobile internet: An empirical investigation. *Decision Support Systems, 43*(1), 111–126. https://doi.org/10.1016/j.dss.2005.05.009.
Kim, B. G., Park, S. C., & Lee, K. J. (2007). A structural equation modeling of the Internet acceptance in Korea. *Electronic Commerce Research and Applications, 6*(4), 425–432. https://doi.org/10.1016/j.elerap.2006.08.005.
Kit, M., Cheung, W., & Lai, V. S. (2005). Literature derived reference models for the adoption of online shopping. *Information & Management, 42*(1), 543–559. https://doi.org/10.1016/j.im.2004.02.006.
Kline, R. B. (2010). *Principles and practice of structural equation modeling* (3rd ed.). New York: The Guilford Press.
Krejcie, R. V., & Morgan, D. W. (1970). Determining sample size for research activities robert. *Educational and Psychological Measurement, 38*(1), 607–610. https://doi.org/10.1177/001316447003000308.
Larsen, T. J., Sørebø, A. M., & Sørebø, Ø. (2009). The role of task-technology fit as users' motivation to continue information system use. *Computers in Human Behavior, 25*(3), 778–784. https://doi.org/10.1016/j.chb.2009.02.006.
Lee, K., Lee, S., & Kim, J. (2005). Analysis of mobile commerce performance by using the task-technology fit. *Mobile Information Systems, 158*(1), 135–153.
Lee, D. Y., & Lehto, M. R. (2013). User acceptance of YouTube for procedural learning: An extension of the technology acceptance model. *Computers & Education, 61*(1), 193–208. https://doi.org/10.1016/j.compedu.2012.10.001.
Lee, B. C., Yoon, J. O., & Lee, I. (2009). Learners' acceptance of e-learning in South Korea: Theories and results. *Computers & Education, 53*(4), 1320–1329. https://doi.org/10.1016/j.compedu.2009.06.014.
Lin, F., Fofanah, S. S., & Liang, D. (2011). Assessing citizen adoption of e-government initiatives in Gambia: A validation of the technology acceptance model in information systems success. *Government Information Quarterly, 28*(2), 271–279. https://doi.org/10.1016/j.giq.2010.09.004.
Lin, W.-S., & Wang, C.-H. (2012). Antecedences to continued intentions of adopting e-learning system in blended learning instruction: A contingency framework based on models of information system success and task-technology fit. *Computers & Education, 58*(1), 88–99. https://doi.org/10.1016/j.compedu.2011.07.008.
Liu, Y., Li, H., & Carlsson, C. (2010). Factors driving the adoption of m-learning: An empirical study. *Computers & Education, 55*(3), 1211–1219. https://doi.org/10.1016/j.compedu.2010.05.018.
Lu, H.-P., & Yang, Y.-W. (2014). Toward an understanding of the behavioral intention to use a social networking site: An extension of task-technology fit to social-technology fit. *Computers in Human Behavior, 34*(1), 323–332. https://doi.org/10.1016/j.chb.2013.10.020.
Makokha, M. W., & Ochieng, D. O. (2014). Assessing the success of ICT's from a user perspective: A case of coffee research foundation. *Journal of Chemical Information and Modeling, 53*(9), 1689–1699. https://doi.org/10.1017/CBO9781107415324.004.
McGill, T. J., & Klobas, J. E. (2009). A task-technology fit view of learning management system impact. *Computers & Education, 52*(2), 496–508. https://doi.org/10.1016/j.compedu.2008.10.002.
Mohammadi, H. (2015). Investigating users ' perspectives on e-learning : An integration of TAM and IS success model. *Computers in Human Behavior, 45*(1), 359–374. https://doi.org/10.1016/j.chb.2014.07.044.
Montesdioca, G. P. Z., & Maçada, A. C. G. (2015). Measuring user satisfaction with information security practices. *Computers & Security, 48*(1), 267–280. https://doi.org/10.1016/j.cose.2014.10.015.
Mutahar, A. M., Daud, N. M., Ramayah, T., Putit, L., Isaac, O., & Alrajawy, I. (2016). The role of trialability, awareness, perceived ease of use, and perceived usefulness in determining the perceived value of using mobile banking in Yemen. *7th international conference postgraduate education (ICPE7)* (pp. 884–898). Malaysia: Shah Alam.
Muthanna, A., & Karaman, A. C. (2014). Higher education challenges in Yemen: Discourses on English teacher education. *International Journal of Educational Development, 37*, 40–47. https://doi.org/10.1016/j.ijedudev.2014.02.002.
Myers, R. H. (1990). *Classical and modern regression with applications* (2nd ed.). Boston: MA: Duxbury.
Negahban, A., & Chung, C. H. (2014). Discovering determinants of users perception of mobile device functionality fit. *Computers in Human Behavior, 35*(1), 75–84. https://doi.org/10.1016/j.chb.2014.02.020.
Ngai, E. W. T., Poon, J. K. L., & Chan, Y. H. C. (2007). Empirical examination of the adoption of WebCT using TAM. *Computers & Education, 48*(1), 250–267.
Norzaidi, M. D. (2008). *Factors determining intranet usage: An empirical study of middle managers in Malaysian port industry.* MULTIMEDIA UNIVERSITY.
Norzaidi, M., Chong, S. C., Murali, R., & Salwani, M. I. (2007). Intranet usage and managers' performance in the port industry. *Industrial Management & Data Systems, 107*(8), 1227–1250. https://doi.org/10.1108/02635570710822831.
Nunnally, J. C., & Bernstein, I. H. (1994). *Psychometric theory.* New York: McGraw-Hill.
Ozturk, A. B., Bilgihan, A., Nusair, K., & Okumus, F. (2016). What keeps the mobile hotel booking users loyal ? Investigating the roles of self-efficacy , compatibility , perceived ease of use , and perceived convenience. *International Journal of Information Management, 36*(6), 1350–1359. https://doi.org/10.1016/j.ijinfomgt.2016.04.005.
O'brien, R. M. (2007). A caution regarding rules of thumb for variance inflation factors. *Quality and Quantity, 41*(5), 673–690. https://doi.org/10.1007/s11135-006-9018-6.
Petter, S., & McLean, E. R. (2009). A meta-analytic assessment of the DeLone and McLean IS success model: An examination of IS success at the individual level. *Information & Management, 46*(3), 159–166. https://doi.org/10.1016/j.im.2008.12.006.
Pituch, K. A., & Lee, Y. (2006). The influence of system characteristics on e-learning use. *Computers & Education, 47*(1), 222–244.
Preacher, K. J., & Hayes, A. F. (2004). SPSS and SAS procedures for estimating indirect effects in simple mediation models. *Behavior Research Methods, Instruments, & Computers, 36*(4), 717–731.
Preacher, K. J., & Hayes, A. F. (2008). Asymptotic and resampling strategies for assessing and comparing indirect effects in multiple mediator models. *Behavior Research Methods, 40*(3), 879–891.
Premkumar, G. (2003). A meta-analysis of research on information technology implementation in small business. *Journal of Organizational Computing & Electronic Commerce, 13*(2), 91–121. https://doi.org/10.1207/S15327744JOCE1302_2.
Ramirez-Correa, P. E., Rondan-Cataluna, F. J., Arenas-Gaitan, J., & Alfaro-Perez, J. L. (2017). Moderating effect of learning styles on a learning management system's success. *Telematics and Informatics, 34*(1), 272–286. https://doi.org/10.1016/j.tele.2016.04.006.
Ringle, C. M., & Sarstedt, M. (2016). Gain more insight from your PLS-SEM results: The importance-performance map analysis. *Industrial Management & Data Systems, 116*(9), 1865–1886. https://doi.org/10.1108/IMDS-10-2015-0449.
Ringle, C. M., Wende, S., & Becker, J.-M. (2015). *SmartPLS 3. Bonningstedt: SmartPLS.* Retrieved October 30, 2017, from http://www.smartpls.com.
Roca, J. C., Chiu, C. M., & Martinez, F. J. (2006). Understanding e-learning continuance intention: An extension of the Technology Acceptance Model. *International Journal of Human-Computer Studies, 64*(8), 683–696. https://doi.org/10.1016/j.ijhcs.2006.01.003.
Rogers, E. M. (1995). *Diffusion of innovations* (4th ed.). New York, London: The Free Press.
Rui-jin, Z., Guo-xin, L., & Ze-zhou, S. (2014). Relationship between consumer innovativeness and internet banking acceptance. *International conference on management*

science & engineering (21th) (pp. 308–314). .
Schumacker, R. E., & Lomax, R. G. (2004). *A beginner's guide to structural equation modeling.* New York: Lawrence Erlbaum.
Shih, M., Feng, J., & Tsai, C. C. (2008). Research and trends in the field of e-learning from 2001 to 2005: A content analysis of cognitive studies in selected journals. *Computers & Education, 51*(2), 955–967. https://doi.org/10.1016/j.compedu.2007.10.004.
Shukor, N. A., Tasir, Z., & der Meijden, H. Van (2015). An examination of online learning effectiveness using data mining. *Procedia - Social and Behavioral Sciences, 172*(1), 555–562. https://doi.org/https://doi.org/10.1016/j.sbspro.2015.01.402.
Son, H., Park, Y., Kim, C., & Chou, J.-S. (2012). Toward an understanding of construction professionals' acceptance of mobile computing devices in South Korea: an extension of the technology acceptance model. *Automation in Construction, 28*, 82–90. https://doi.org/10.1016/j.autcon.2012.07.002.
Stefanovic, D., Marjanovic, U., Delic, M., Culibrk, D., & Lalic, B. (2016). Assessing the success of e-government systems : An employee perspective. *Information & Management, 53*(1), 717–726. https://doi.org/10.1016/j.im.2016.02.007.
Sullivan, G. M., & Feinn, R. (2012). Using Effect Size - or why the p Value is not enough. *Journal of Graduate Medical Education, 4*(3), 279–282.
Šumak, B., Hericko, M., & Pušnik, M. (2011). A cross-cultural study of ICT competency, attitude and satisfaction of Turkish, polish and Czech university students. *Turkish Online Journal of Educational Technology, 10*(4), 31–38. https://doi.org/10.1016/j.chb.2011.08.005.
Sun, P.-C., Tsai, R. J., Finger, G., Chen, Y.-Y., & Yeh, D. (2008). What drives a successful e-learning? An empirical investigation of the critical factors influencing learner satisfaction. *Computers & Education, 50*(4), 1183–1202. https://doi.org/10.1016/j.compedu.2006.11.007.
Tabachnick, B. G., & Fidell, L. S. (2012). *Using multivariate statistics* (6th ed.). New York: Pearson.
Tam, C., & Oliveira, T. (2016). Understanding the impact of m-banking on individual performance: DeLone & McLean and TTF perspective. *Computers in Human Behavior, 61*(1), 233–244. https://doi.org/10.1016/j.chb.2016.03.016.
Tenório, T., Bittencourt, I. I., Isotani, S., & Silva, A. P. (2016). Does peer assessment in on-line learning environments work? A systematic review of the literature. *Computers in Human Behavior, 64*(1), 94–107. https://doi.org/10.1016/j.chb.2016.06.020.
The Global Competitiveness Report (2017). *The global competitiveness Report 2016–2017*Geneva: World Economic Forum. https://doi.org/92-95044-35-5.
UNESCO (2013). *UNESCO Policy guidelines for mobile learning.* Paris: UNESCO Working Paper Series on Mobile Learning. Retrieved from http://unesdoc.unesco.org/images/0021/002196/219641e.pdf.
Wang, Y. S. (2008). Assessing e-commerce systems success: A respecification and validation of the DeLone and McLean model of IS success. *Information Systems Journal, 18*(5), 529–557. https://doi.org/10.1111/j.1365-2575.2007.00268.x.
Wang, W.-T., & Lai, Y.-J. (2014). Examining the adoption of KMS in organizations from an integrated perspective of technology, individual, and organization. *Computers in Human Behavior, 38*(1), 55–67. https://doi.org/10.1016/j.chb.2014.05.013.
Wang, Y. S., & Liao, Y. W. (2008). Assessing eGovernment systems success: A validation of the DeLone and McLean model of information systems success. *Government Information Quarterly, 25*(4), 717–733. https://doi.org/10.1016/j.giq.2007.06.002.
Werts, C. E., Linn, R. L., & Jöreskog, K. G. (1974). Intraclass reliability estimates: Testing structural assumptions. *Educational and Psychological Measurement, 34*(1), 25–33.
World Development Indicators. (2017). World Bank Group.
Wu, J. H., & Wang, Y. M. (2006). Measuring KMS success: A respecification of the DeLone and McLean's model. *Information & Management, 43*(6), 728–739. https://doi.org/10.1016/j.im.2006.05.002.
Xinli, H. (2015). Effectiveness of information technology in reducing corruption in China. *The Electronic Library, 33*(1), 52–64. https://doi.org/10.1108/EL-11-2012-0148.
Yang, J. C., Quadir, B., Chen, N. S., & Miao, Q. (2016). Effects of online presence on learning performance in a blog-based online course. *Internet and Higher Education, 30*(1), 11–20. https://doi.org/10.1016/j.iheduc.2016.04.002.
Zhou, T. (2011). An empirical examination of initial trust in mobile banking. *Internet Research, 21*(5), 527–540. https://doi.org/10.1108/10662241111176353.

Osama is currently an assistant professor at Faculty of Business and Accountancy, Lincoln University College (LUC), Malaysia. He holds a degree in computer science from Mutah University, Jordan. He received his master degree in Computer Science specialized on multimedia from Universiti Putra Malaysia (UPM), and He completed his doctoral degree in Management from Arshad Ayub Graduate Business School (AAGBS) at Universiti Teknologi MARA (UiTM). His areas of interest include Technology Management, research methodology and the use of quantitative methods in management research. Osama is well-trained in quantitative analysis using SPSS, AMOS-SEM, and SmartPLS-SEM. Osama can be contacted at osama4isaac@gmail.com.

Adnan is currently an assistant professor at the Faculty of Business Management and Professional Studies, Management and Science University (MSU), Shah Alam, Malaysia. He holds a degree in management information systems from international Islamic University Malaysia. He received his master in Business Administration (MBA) degree from UiTM, University Technology Mara, Malaysia, and He completed his Ph.D. in Business Management from Universiti Teknologi MARA (UiTM). His areas of interest include Technology Management, research methodology and online learning usage. Adnan can be contacted at Adnan.aldholay@gmail.com

Zaini Abdullah is currently a professor at the faculty of business management, Universiti Teknologi Mara UITM, Malaysia. He teaches mainly courses in Management, Global Issues, Quality Management, Human Resources, Strategic management. His publications have appeared in European Journal of Social Sciences, international Journal of Business and Management, International Business Research, International Education Studies. PhD, Universiti of Memphis (USA) - Universiti Utara Malaysia (2003). MBA, Western Illinois University, USA (1986). Baccalaureate Bachelor of Business, Western Illinois University, USA (1994). Advance Diploma Business Administration, Institut Teknologi MARA (1982). He can be contacted at zabadu@salam.uitm.edu.my.

T. Ramayah is currently a Professor of Technology Management at the School of Management, Universiti Sains Malaysia, Visiting Professor King Saud University, Kingdom of Saudi Arabia and Adjunct Professor at Sunway University, Multimedia University and Universiti Tenaga Nasional, Malaysia. His areas of interest include Technology Management and also the use of quantitative methods in management research. His full profile can be accessed from http://www.ramayah.com. T. Ramayah can be contacted at ramayah@usm.my.